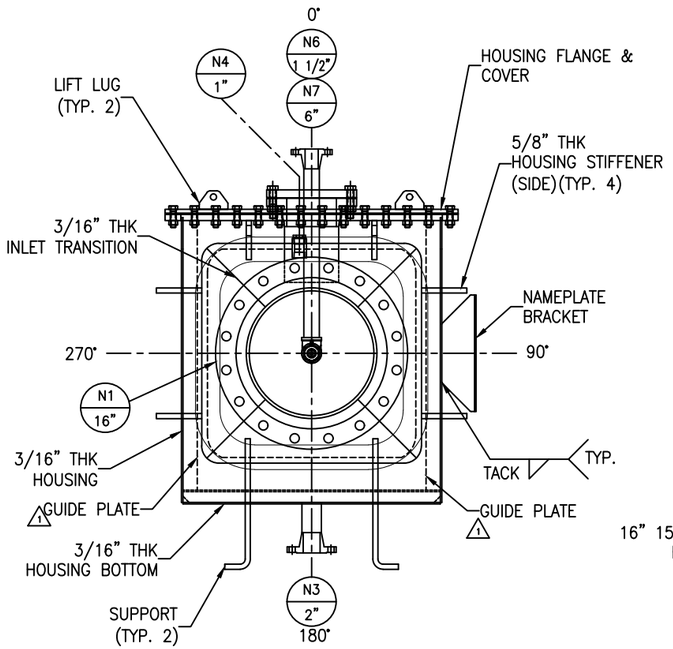

VIEW A-A

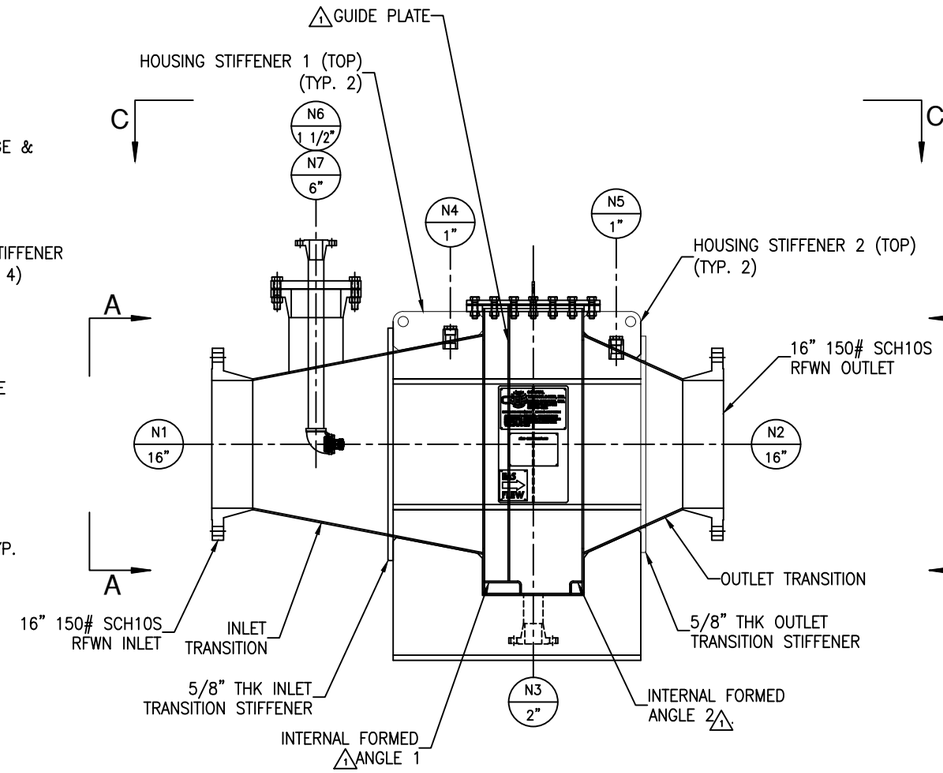

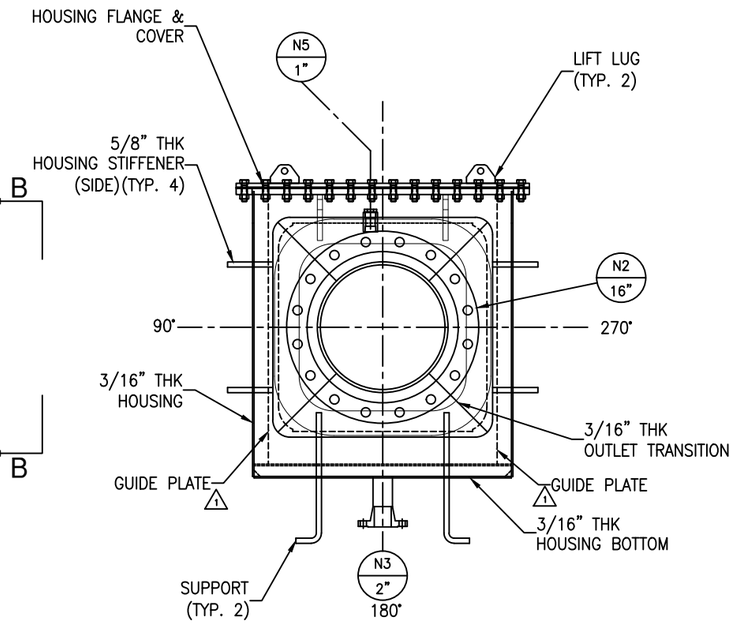

VIEW B-B

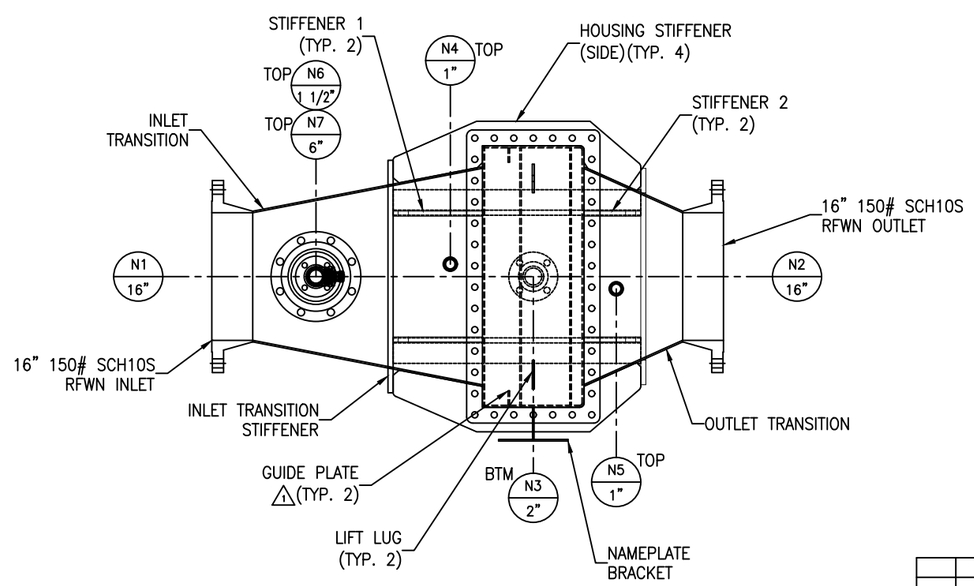

VIEW C-C

REV	D.BY	C.BY	DATE	DESCRIPTION
2				AS BUILT
1	RS	AD	10/28/25	CERTIFIED
0	AD	RS	10/4/25	APPROVAL

REVISIONS

Savannah Tank & Equipment Corp.
1517 Telfair Road, Savannah, GA 31415
(912) 233-8902

DRAWN BY: AD
CHK'D BY: RS
APPROVED BY: NP
SCALE: 1" = 1'-0"

COASTAL TECHNOLOGIES, INC.
MIST ELIMINATOR HOUSING W/ FACE WASH
EQUIP. #
CUST. PO #91687

DRAWING NO.: 098-25-1 SHT 1 OF 7 REV. SET 1

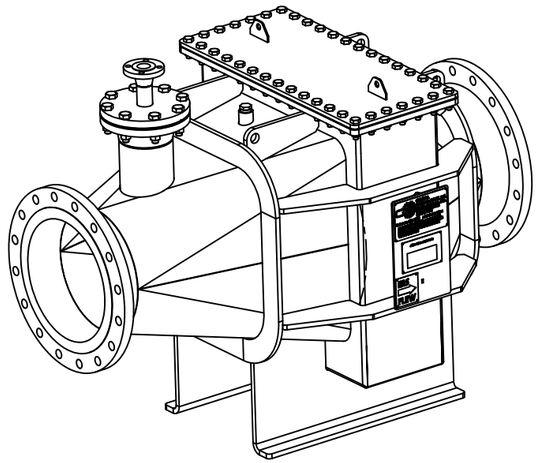

ISOMETRIC VIEW (REF. ONLY)

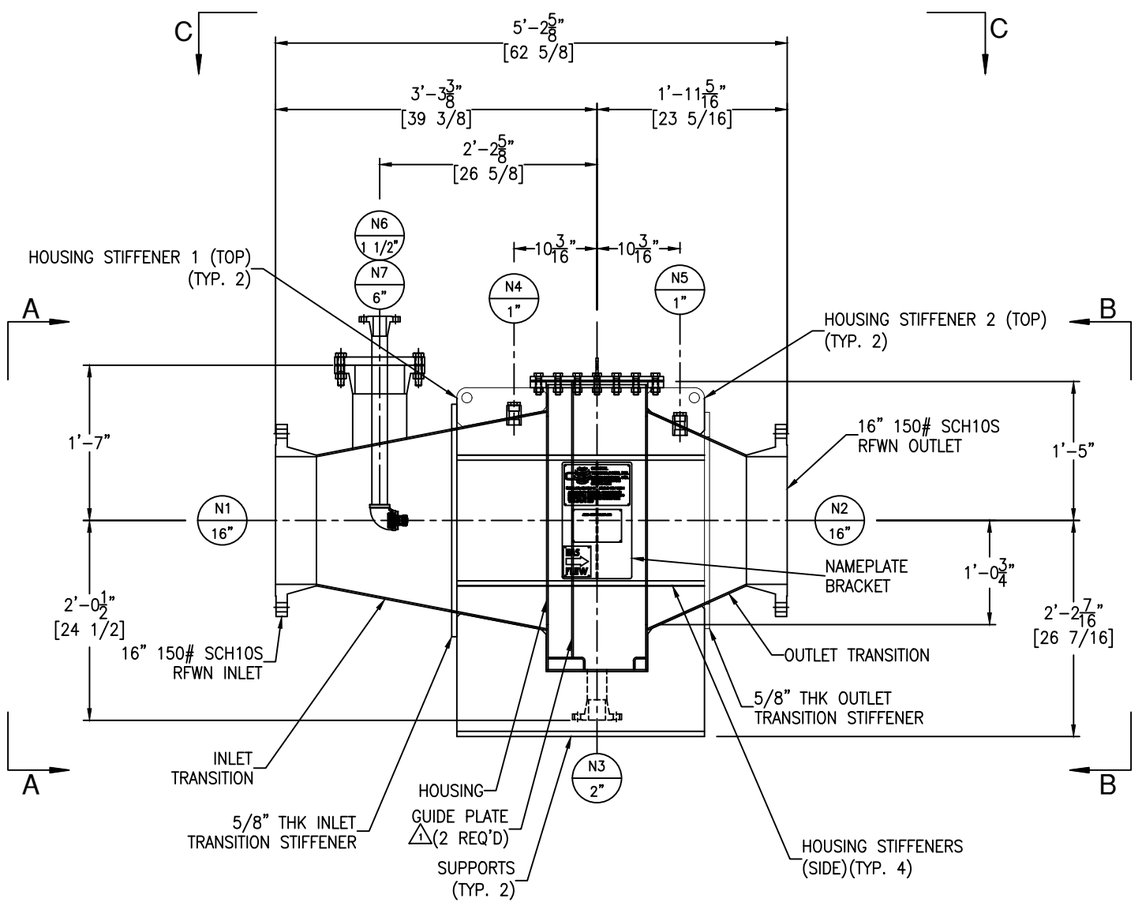

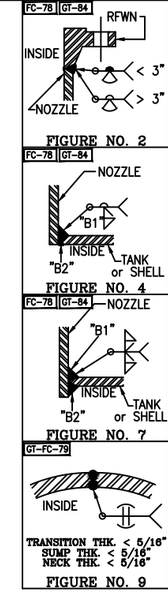

NOZZLE SCHEDULE

MARK	SERVICE	SIZE	RATING	TYPE / STYLE	NECK SCHED.	PROJECTION EXT. (℄)	PROJECTION INT. (MIN.)	WELD FIGURE	REPAD SIZE (WIDTH X THK.)	WELD SIZE "A1"	"A2"	"B1"	"B2"	"C1"	"C2"
N1	INLET	16"	150#	RFWN	–	–	–	2	–	–	–	–	–	–	–
N2	OUTLET	16"	150#	RFWN	–	–	–	2	–	–	–	–	–	–	–
N3	DRAIN	2"	150#	RFWN	40S	SEE DWG	–	2,4	–	–	–	3/16	1/8	–	–
N4	–	1"	3000#	THRD. FULL. CPLG W/ PLUG	–	–	5/8"	7	–	–	–	3/16	1/8	–	–
N5	–	1"	3000#	THRD. FULL. CPLG W/ PLUG	–	–	5/8"	7	–	–	–	3/16	1/8	–	–
N6	FACE WASH HEADER 1	1/2"	150#	RFWN W/ ELBOW	40S	SEE DWG	SEE DWG	2,7	–	–	–	3/16	1/8	–	–
N7	BASE NOZZLE	6"	150#	RFWN	40S	SEE DWG	–	2,4	–	–	–	1/4	1/8	–	–

MATERIALS OF CONSTRUCTION

	VESSEL
TRANSITIONS	SA240-2507 SUPER DUPLEX
HOUSING	SA240-2507 SUPER DUPLEX
END FLANGES	SA182F-2507 SUPER DUPLEX
NOZZLE NECKS	SA312-2507 & SA403-2507 WPW & SA240-2507 SUPER DUPLEX
NOZZLE FLANGES	SA182F-2507 SUPER DUPLEX
HOUSING ACCESS FLANGE	SA240-2507 SUPER DUPLEX
HOUSING ACCESS COVER	SA240-2507 SUPER DUPLEX
GASKETS	FULL FACE EXPANDED PTFE
BOLTS/STUDS	SA193-B8
NUTS	SA194-8
COUPLINGS/PLUG	SA182F-2507 SUPER DUPLEX
SUPPORTS/HOLD DOWNS	SA240-304/304L
ACCESS COVER LIFT LUGS	SA240-304/304L
TRANSITION STIFFENER RINGS	SA240-304/304L
TRANSITION STIFFENER LUG	SA240-304/304L
REDUCING BUSHING	SS304/304L
HOUSING STIFFENERS (SIDE)	SA240-304/304L
INTERNAL ANGLES	1 SA240-2507 SUPER DUPLEX
INTERNAL GUIDE PLATE	1 SA240-2507 SUPER DUPLEX
HANDRAIL	–
HANDRAIL CLIPS	–
PLATFORM	–
PLATFORM CLIPS	–
DIPTUBE SUPPORT	–
JACKET SHELL	–
JACKET HEADS	–
JACKET NOZZLE NECKS	–
JACKET NOZZLE FLANGES	–

DESIGN DATA

	VESSEL
DESIGN AND FAB. CODE	ASME
CERT. STAMP REQ'D.	YES
DESIGN PRESSURE	5 PSIG / F.V.
DESIGN TEMPERATURE	1 250° F
MIN. DESIGN METAL TEMP.	-20° F @ 12.11 PSIG
OPERATING PRESSURE	–
OPERATING TEMPERATURE	–
JOINT EFFICIENCY HEADS	0.70
JOINT EFFICIENCY SHELL	0.70
CORROSION ALLOWANCE	0"
SPECIFIC GRAVITY	–
EARTHQUAKE ZONE	Ss = (–) S1 = (–)
WIND LOAD	– MPH
STRESS RELIEF	NOT REQ'D
RADIOGRAPHIC EXAM	NOT REQ'D
DYE PENETRANT EXAM	NOT REQ'D
MAGNETIC PARTICLE EXAM	NOT REQ'D
HYDROSTATIC TEST	6.5 PSIG / GAUGE #13
PNEUMATIC TEST	–
JKT HYDRO TEST	–
JKT DESIGN AND FAB. CODE	–
JKT CERT. STAMP REQ'D.	–
JKT DESIGN PRESSURE	–
JKT DESIGN TEMPERATURE	–
JKT MIN. DESIGN METAL TEMP.	–
JKT OPERATING PRESSURE	–
JKT OPERATING TEMPERATURE	–
JKT JOINT EFFICIENCY HEADS	–
JKT JOINT EFFICIENCY SHELL	–

VESSEL FINISH

INTERIOR WELD TREATMENT:	SAV TANK STANDARD
EXTERIOR WELD TREATMENT:	SAV TANK STANDARD
SAV TANK FINISHING STANDARD:	SEE NOTE 5/1
INSULATION:	N/A
PAINTING:	N/A

VESSEL CAPACITY AND WEIGHTS

OPERATING CAPACITY	–
FULL CAPACITY	110 GAL.
EMPTY SHIPPING WEIGHT	1,500 LBS.
WEIGHT FULL OF WATER	2,400 LBS.
WEIGHT FULL OF PRODUCT	2,400 LBS.

ASME SECT. VIII, DIV. 1
2023 EDITION

ENG. _____ DATE: _____

Q.C. _____ DATE: _____

A.I. _____ DATE: _____

This drawing is issued for customer approval. please review, make approval changes (if any) in red. check the appropriate box, sign & date.

- ☐ Approval – no changes. Please proceed with fabrication.
- ☐ Approved as noted. Please proceed with fabrication
- ☐ Not approved. Please make changes and resubmit.

Customer signature _____ Date _____

GENERAL NOTES

1.) COVER ALL FLANGES, OPENINGS & MACHINED SURFACES PRIOR TO SHIPMENT UNLESS OTHERWISE NOTED.
2.) BOLT HOLES TO STRADDLE 0° & 180° UNLESS OTHERWISE NOTED.
3.) ASME CODE VESSELS TO BE IN ACCORDANCE WITH UG-80 & UG-81. TOLERANCES: +/- 1/8" FOR DIMENSIONS AND +/- 2 DEGREES FOR ORIENTATIONS.
4.) ASME MATERIALS TO CONFORM TO THE FOLLOWING: FLANGES – B16.5, FITTINGS – B16.9 & COUPLINGS – B16.11.
5.) PICKLE ALL EXTERIOR WELDS. PASSIVATE INTERIOR & EXTERIOR OF VESSEL.

REVISIONS

REV	D.BY	C.BY	DATE	DESCRIPTION
2				AS BUILT
1	RS	AD	10/28/25	CERTIFIED
0	AD	RS	10/4/25	APPROVAL

Savannah Tank & Equipment Corp.
1517 Telfair Road, Savannah, GA 31415
(912) 233-8902

DRAWN BY: AD
CHK'D BY: RS
APPROVED BY: NP
SCALE: 1" = 1'-0"

COASTAL TECHNOLOGIES, INC.
MIST ELIMINATOR HOUSING W/ FACE WASH
EQUIP. #
CUST. PO #91687

DRAWING NO.: 098-25-2 SHT 2 OF 7 REV. SET 1

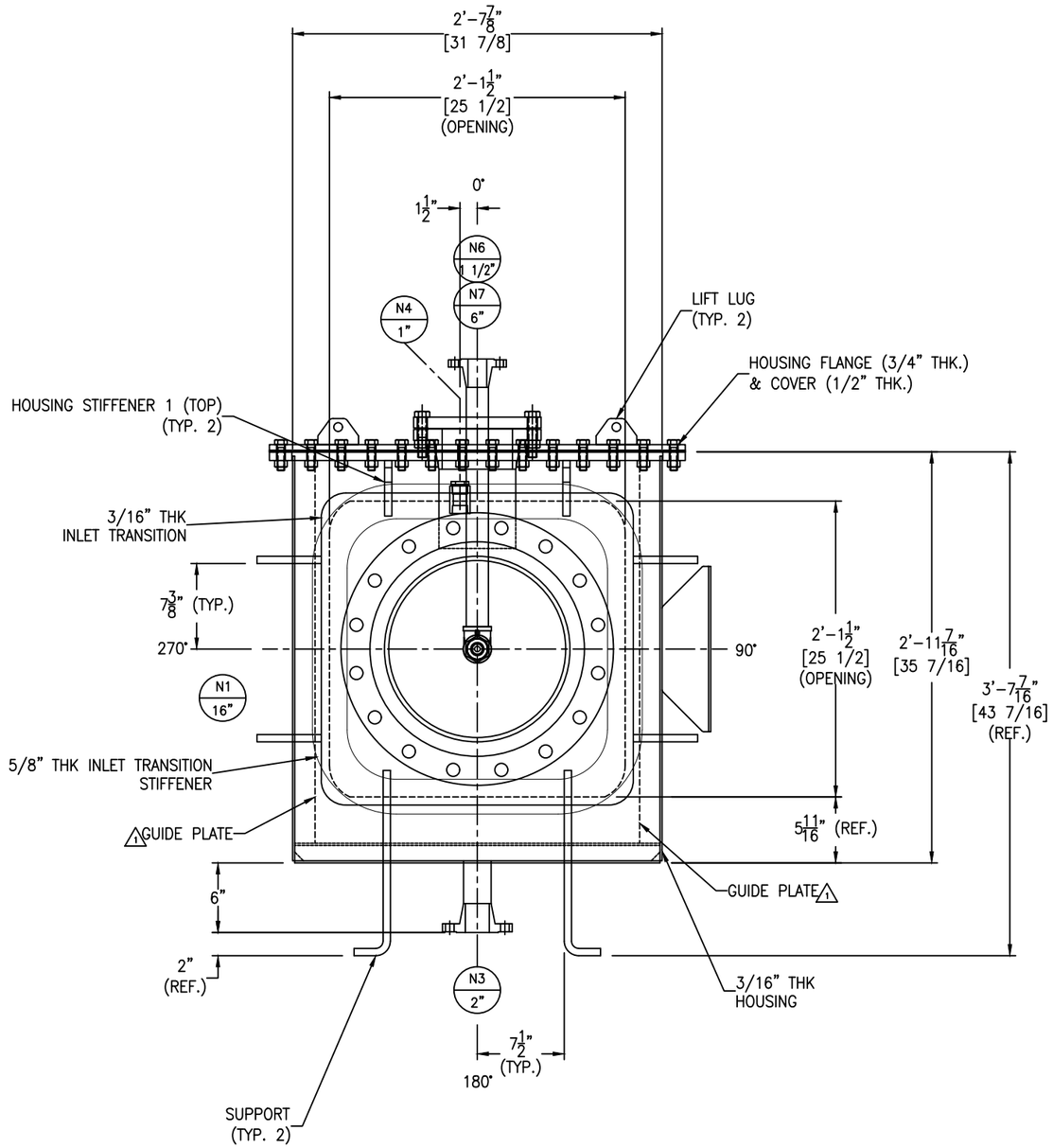

VIEW A-A

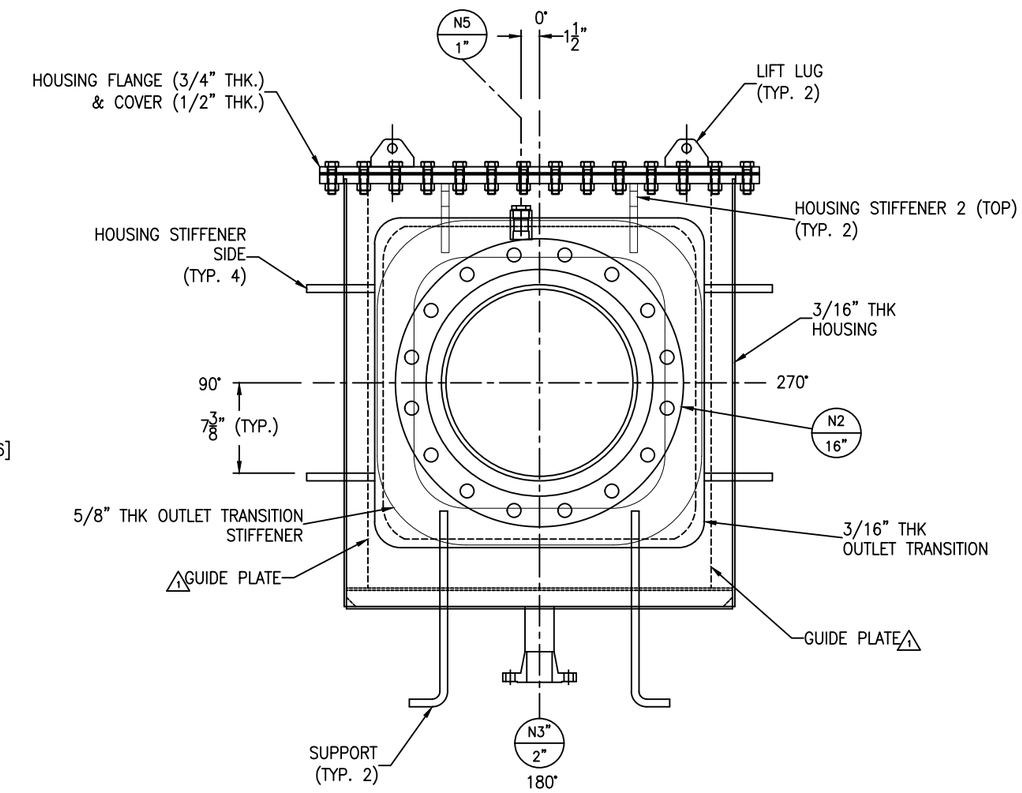

VIEW B-B

REV	D.BY	C.BY	DATE	DESCRIPTION
2				AS BUILT
1	RS	AD	10/28/25	CERTIFIED
0	AD	RS	10/4/25	APPROVAL

REVISIONS

Savannah Tank & Equipment Corp.
1517 Telfair Road, Savannah, GA 31415
(912) 233-8902

DRAWN BY: AD
CHK'D BY: RS
APPROVED BY: NP
SCALE: 1 1/2" = 1'-0"

COASTAL TECHNOLOGIES, INC.
MIST ELIMINATOR HOUSING W/ FACE WASH
EQUIP. #
CUST. PO #91687

DRAWING NO.: 098-25-3 SHT 3 OF 7 REV. SET 1

FC-78 GT-84
FC-58

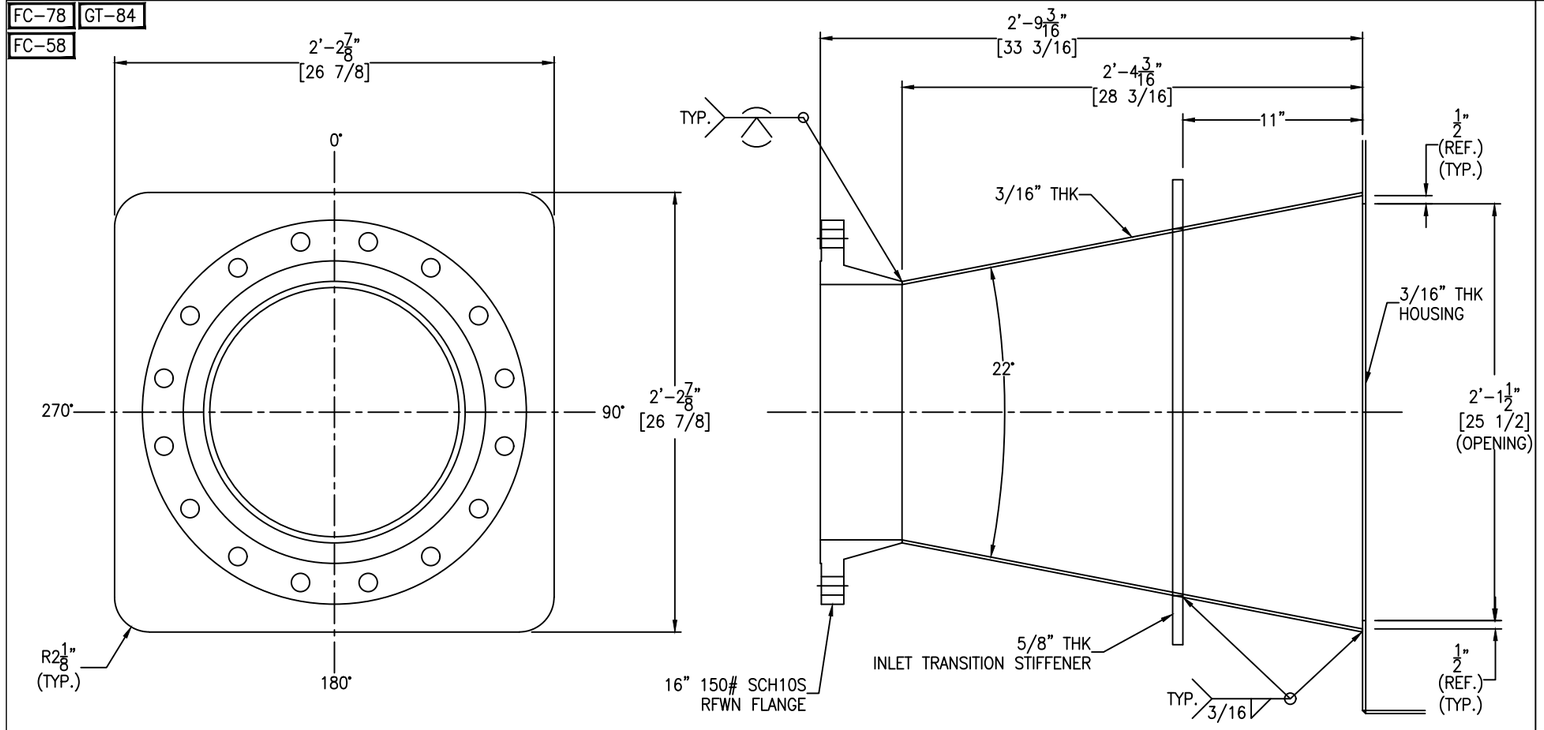

INLET TRANSITION DETAIL

SCALE: 2" = 1'-0"

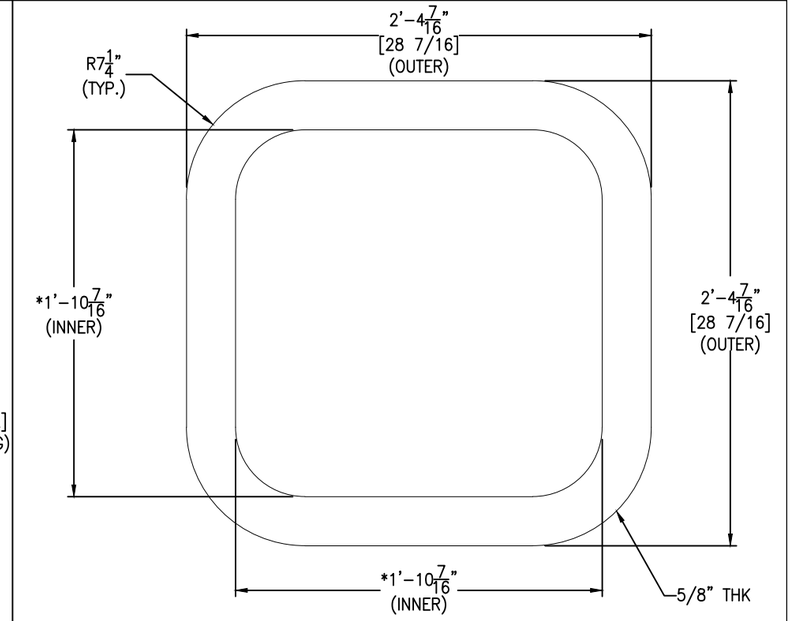

VERIFY FORMED TRANSITION BEFORE CUTTING STIFFENER

INLET TRANSITION STIFFENER DETAIL

SCALE: 2" = 1'-0"

FC-78 GT-84
FC-58

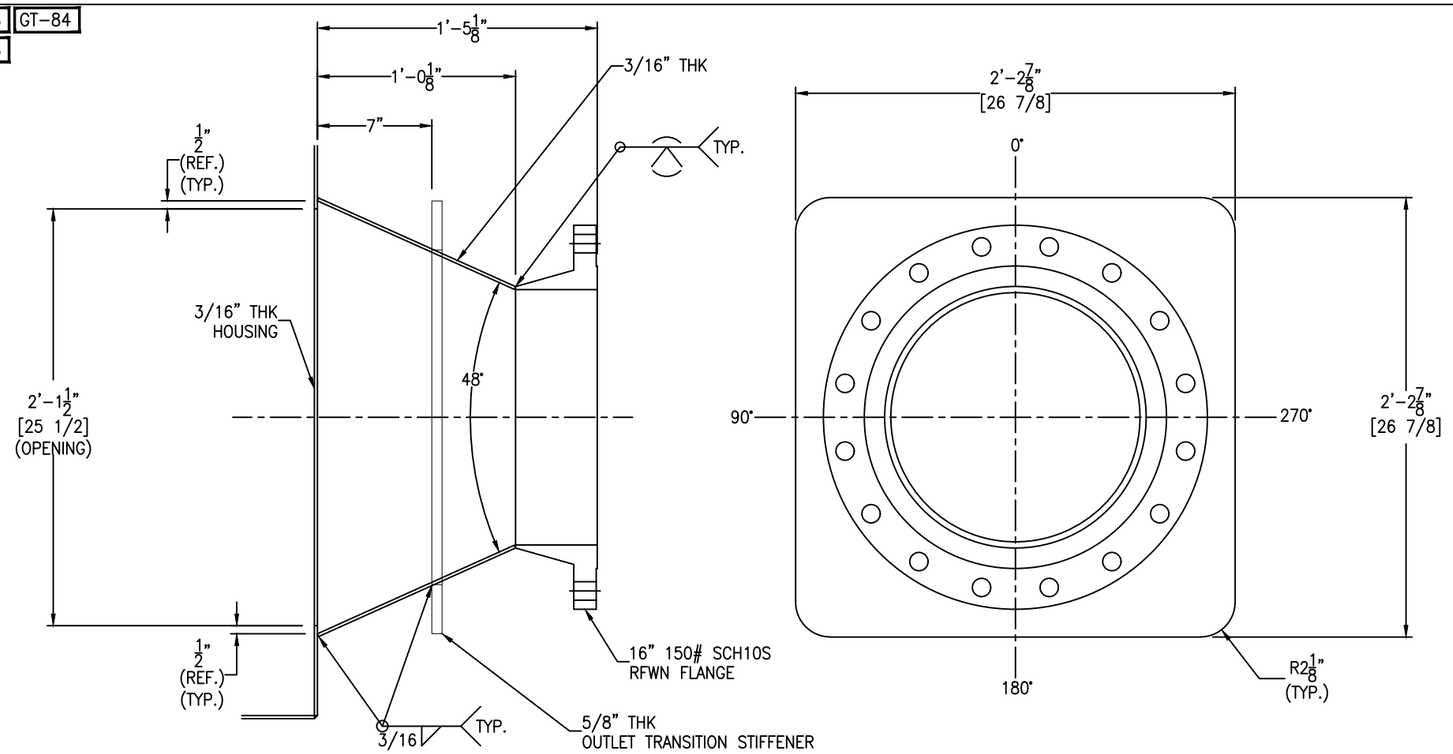

OUTLET TRANSITION DETAIL

SCALE: 2" = 1'-0"

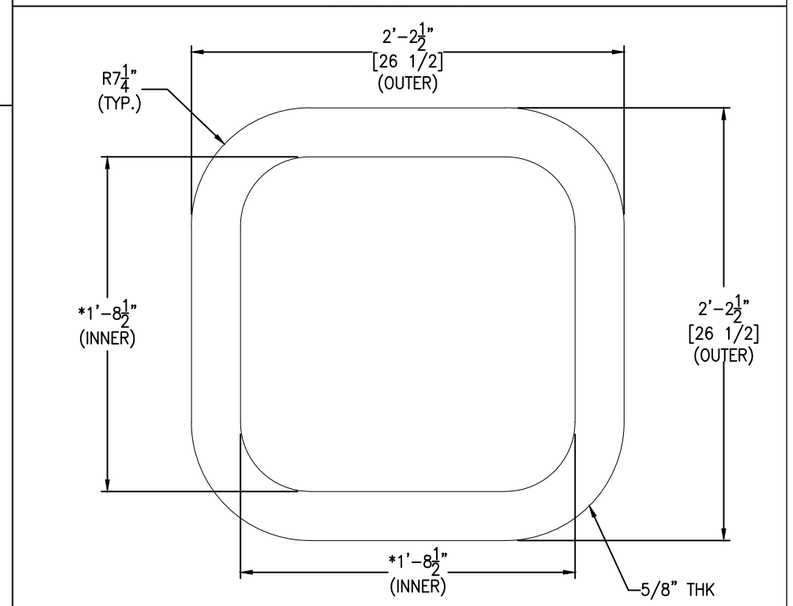

***VERIFY FORMED TRANSITION BEFORE CUTTING STIFFENER ***

OUTLET TRANSITION STIFFENER DETAIL

SCALE: 2" = 1'-0"

REV	D.BY	C.BY	DATE	DESCRIPTION
2				AS BUILT
1	RS	AD	10/28/25	CERTIFIED
0	AD	RS	10/4/25	APPROVAL

⚠ REVISIONS

Savannah Tank & Equipment Corp.
1517 Telfair Road, Savannah, GA 31415
(912) 233-8902

DRAWN BY: AD
CHK'D BY: RS
APPROVED BY: NP
SCALE: 1" = 1'-0"

COASTAL TECHNOLOGIES, INC.
MIST ELIMINATOR HOUSING W/ FACE WASH
EQUIP. #
CUST. PO #91687

DRAWING NO.: 098-25-4 SHT 4 OF 7 REV. SET 1

FC-58

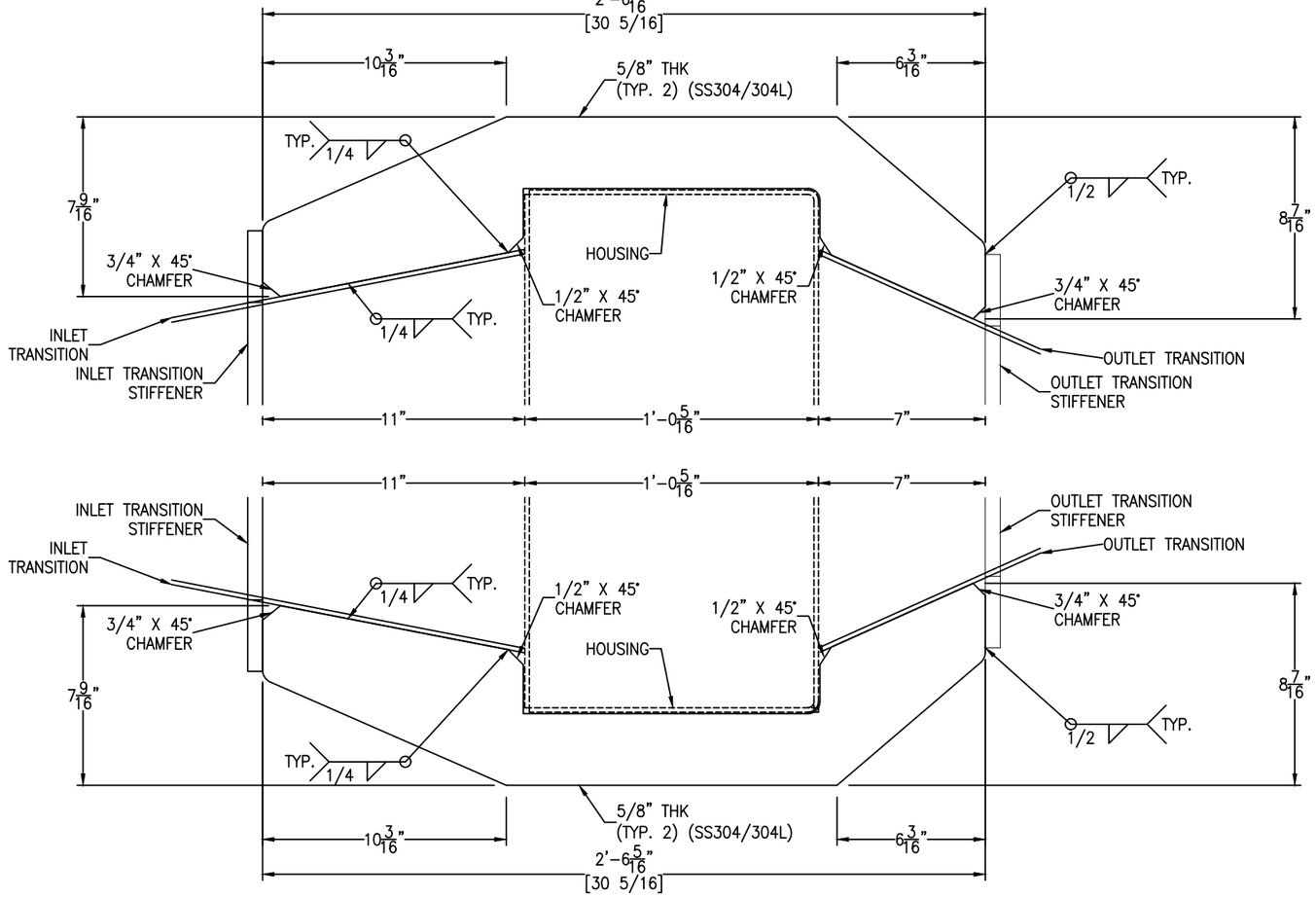

HOUSING STIFFENER (SIDE) DETAIL

SCALE: 3" = 1'-0"

SEE SHEET 3 FOR STIFFENER ELEVATION

FC-78 GT-84

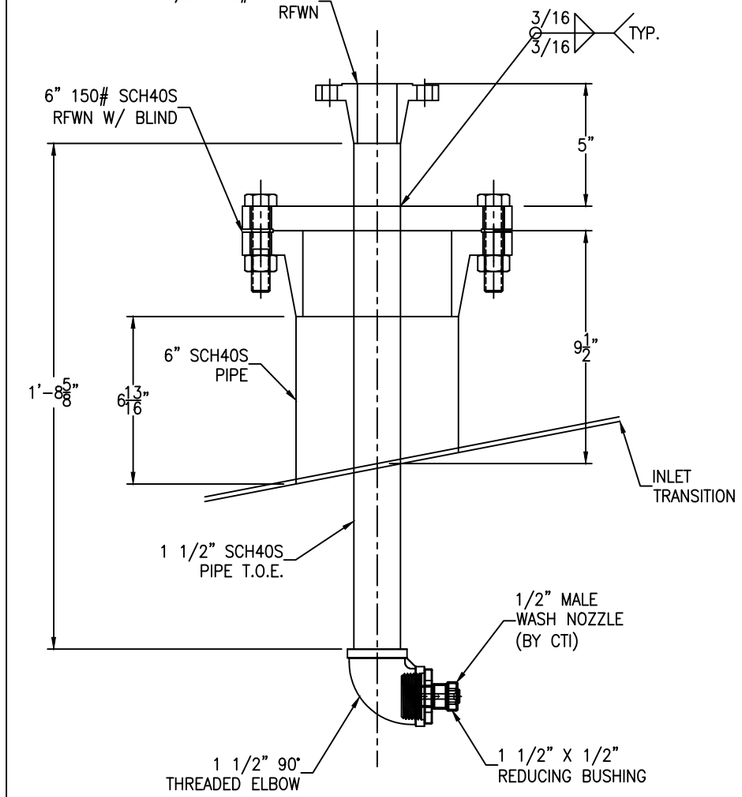

N6 AND N7 DETAIL

SCALE: 3" = 1'-0"

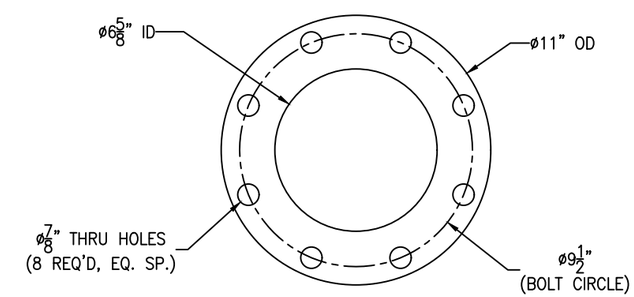

△1 N7 GASKET DETAIL

SCALE: 3" = 1'-0"

Bolting for blinds
N7: (8) 3/4"-10 NC x 3 1/2" HH BOLT
(8) 3/4"-10 NC HH NUT
(1) 6" 150# FULL FACE EXTENDED PTFE GASKET X 1/8" THK

FC-58

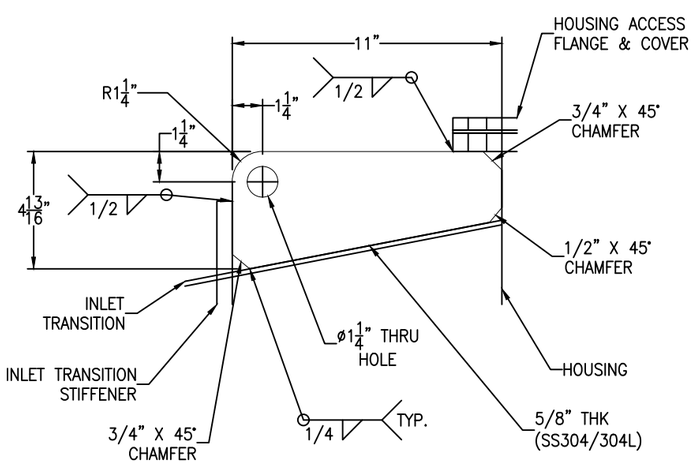

HOUSING STIFFENER 1 (TOP) DETAIL

(2 REQ'D) SCALE: 3" = 1'-0"

FC-58

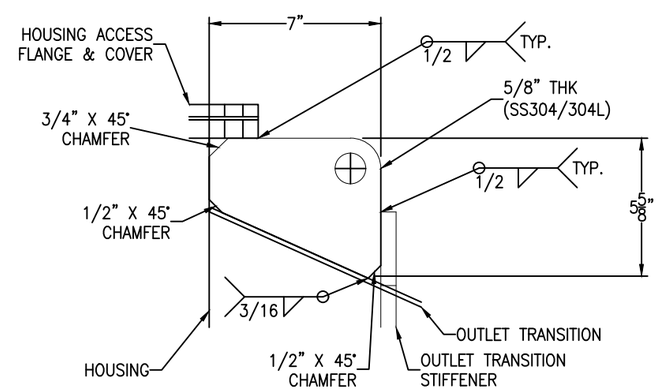

HOUSING STIFFENER 2 (TOP) DETAIL

(2 REQ'D) SCALE: 3" = 1'-0"

REV	D.BY	C.BY	DATE	DESCRIPTION
2				AS BUILT
1	RS	AD	10/28/25	CERTIFIED
0	AD	RS	10/4/25	APPROVAL

△1 REVISIONS

Savannah Tank & Equipment Corp.
1517 Telfair Road, Savannah, GA 31415
(912) 233-8902

DRAWN BY: AD
CHK'D BY: RS
APPROVED BY: NP
SCALE: 1" = 1'-0"

COASTAL TECHNOLOGIES, INC.
MIST ELIMINATOR HOUSING W/ FACE WASH
EQUIP. #
CUST. PO #91687

DRAWING NO.: 098-25-5 SHT 5 OF 7 REV. SET 1

FC-78 △1

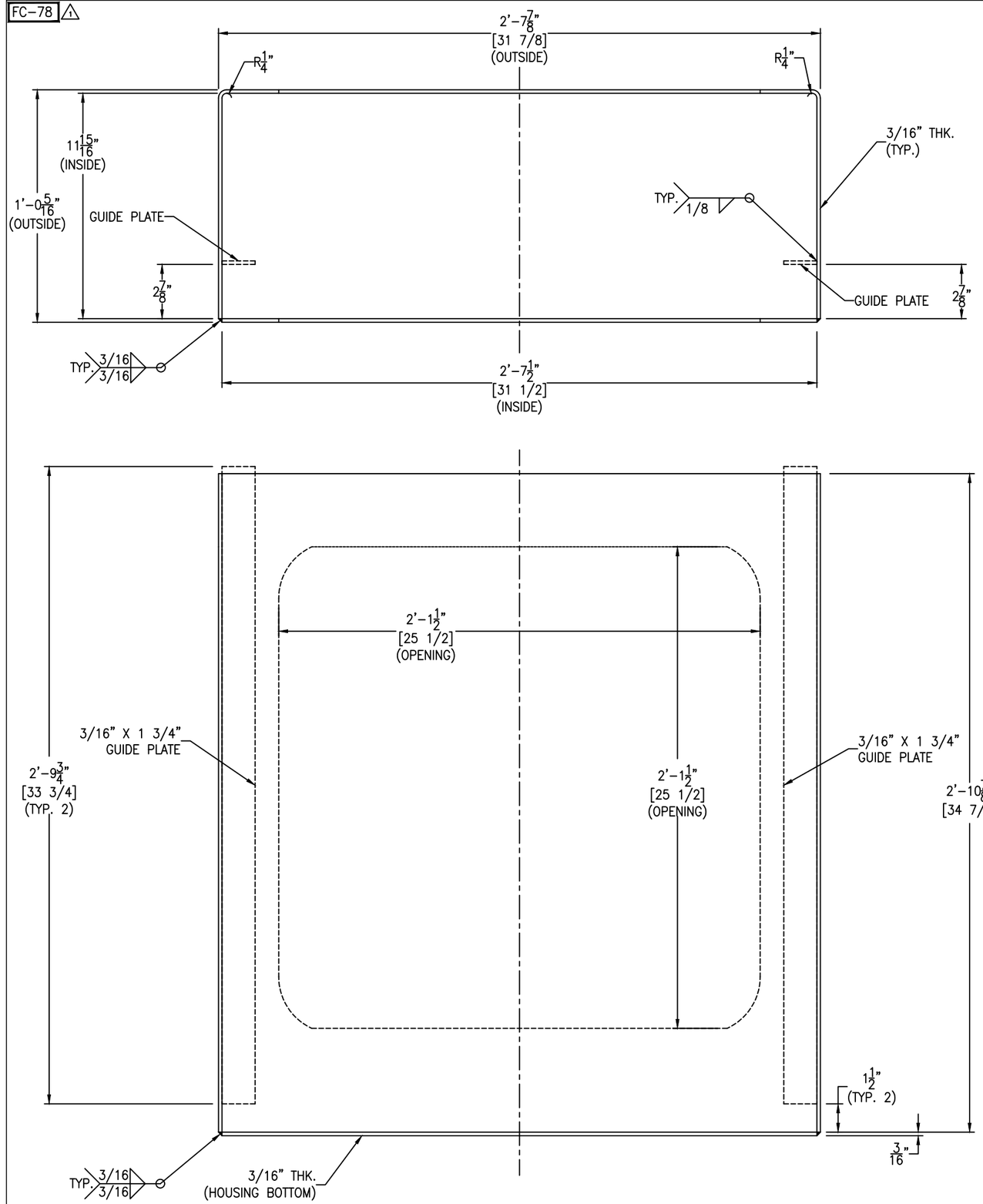

△1 HOUSING BOX DETAIL

SCALE: 3" = 1'-0"

FC-58

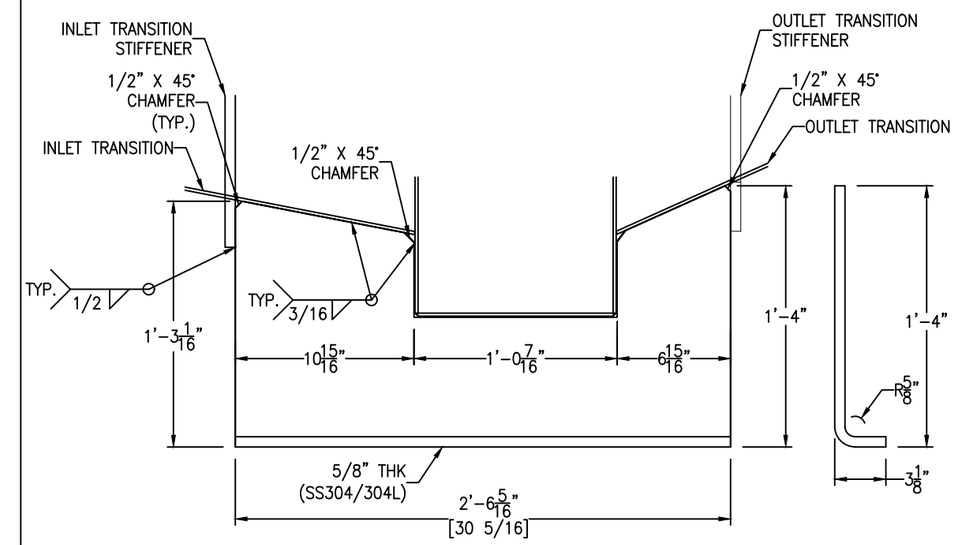

SUPPORT DETAIL

(2 REQ'D) SCALE: 2" = 1'-0"

FC-78 △1

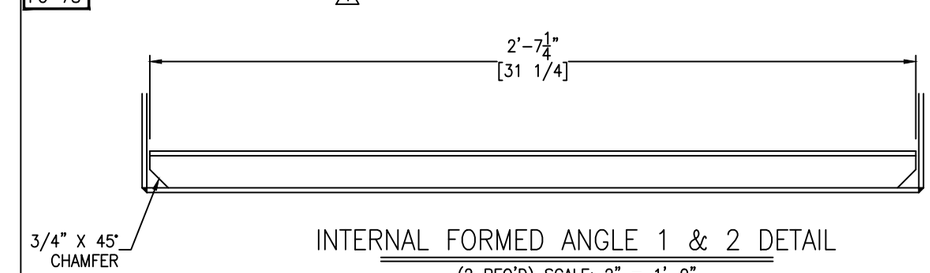

INTERNAL FORMED ANGLE 1 & 2 DETAIL

(2 REQ'D) SCALE: 2" = 1'-0"

FC-78 △1

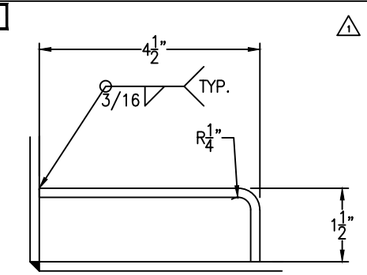

INTERNAL FORMED ANGLE 1 PROFILE

SCALE: 6" = 1'-0"

FC-78 △1

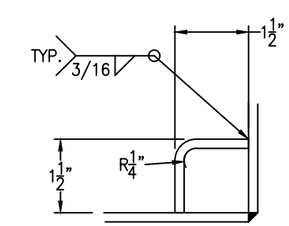

INTERNAL FORMED ANGLE 2 PROFILE

SCALE: 6" = 1'-0"

REV	D.BY	C.BY	DATE	DESCRIPTION
2				AS BUILT
1	RS	AD	10/28/25	CERTIFIED
0	AD	RS	10/4/25	APPROVAL

△1 REVISIONS

Savannah Tank & Equipment Corp.
1517 Telfair Road, Savannah, GA 31415
(912) 233-8902

DRAWN BY:	AD
CHK'D BY:	RS
APPROVED BY:	NP
SCALE:	1" = 1'-0"

COASTAL TECHNOLOGIES, INC.
MIST ELIMINATOR HOUSING W/ FACE WASH
EQUIP. #
CUST. PO #91687

DRAWING NO.: 098-25-6 SHT 6 OF 7 REV. SET 1

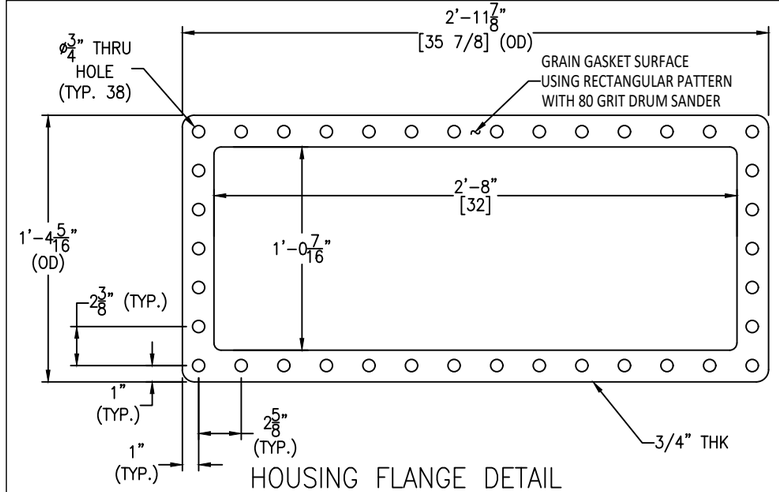

HOUSING FLANGE DETAIL

SCALE: 2" = 1'-0"

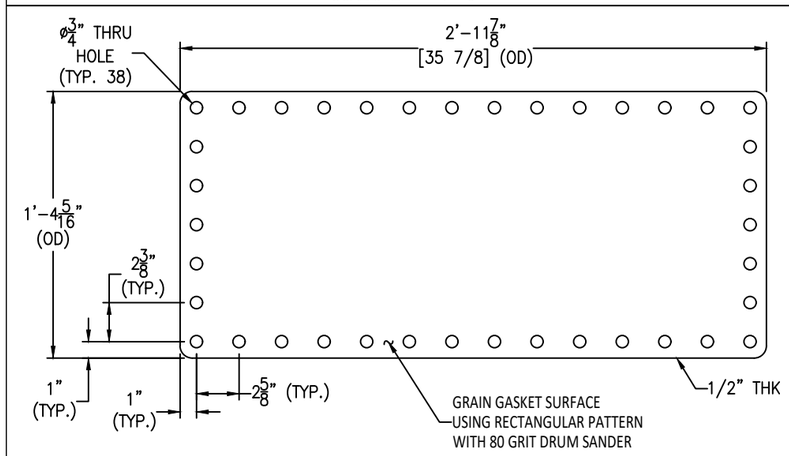

HOUSING COVER DETAIL

SCALE: 2" = 1'-0"

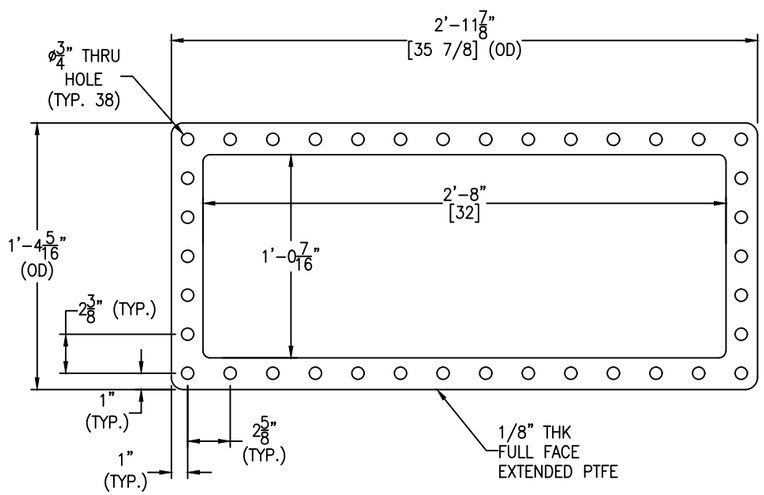

HOUSING GASKET DETAIL

SCALE: 2" = 1'-0"

FC-78

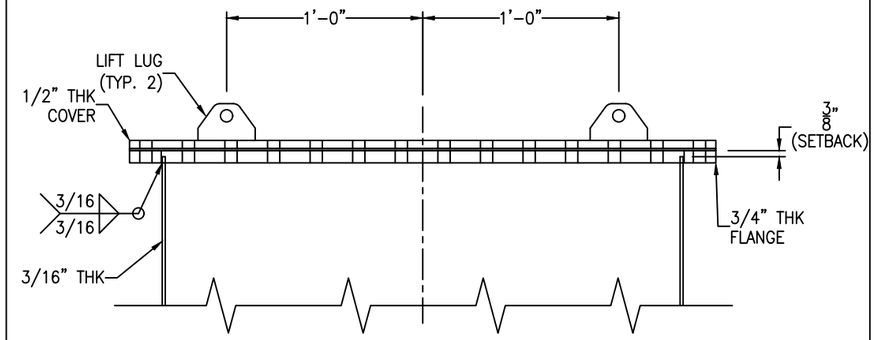

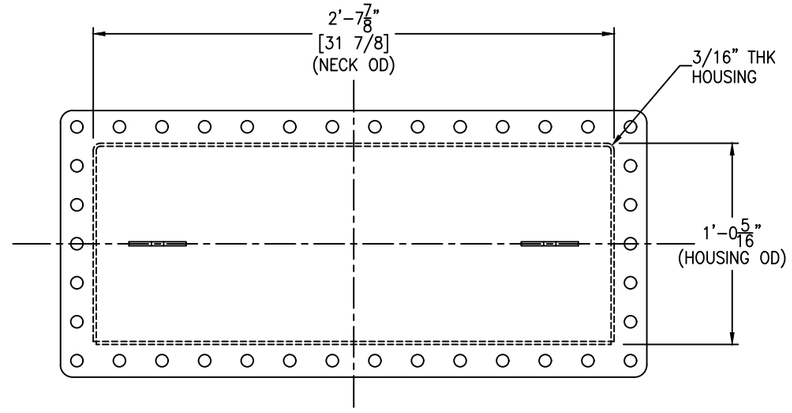

HOUSING ACCESS DETAIL

SCALE: 2" = 1'-0"

FC-58

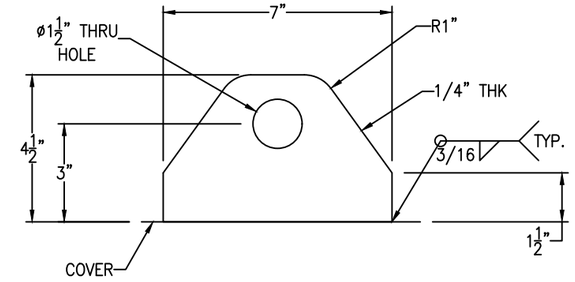

LIFT LUG DETAIL

SCALE: 4" = 1'-0"

FC-58

NOTE: NAMETAG GAS FLOW TAG AND ITS BRACKET WILL BE PROVIDED BY CTI.

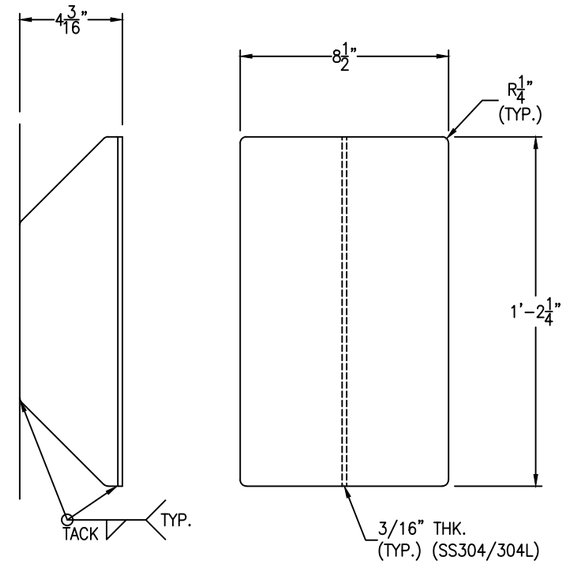

NAMEPLATE BRACKET DETAIL

SCALE: 3" = 1'-0"

Bolting for Access Cover

(38) 5/8"-11 NC x 2 1/4" HH BOLT
(38) 5/8"-11 NC HH NUT
(1) 1/8" THK GASKET PER HOUSING GASKET DETAIL

REV	D.BY	C.BY	DATE	DESCRIPTION
2				AS BUILT
1	RS	AD	10/28/25	CERTIFIED
0	AD	RS	10/4/25	APPROVAL

REVISIONS

Savannah Tank & Equipment Corp.
1517 Telfair Road, Savannah, GA 31415
(912) 233-8902

DRAWN BY: AD
CHK'D BY: RS
APPROVED BY: NP
SCALE: 1" = 1'-0"

COASTAL TECHNOLOGIES, INC.
MIST ELIMINATOR HOUSING W/ FACE WASH
EQUIP. #
CUST. PO #91687

DRAWING NO.: 098-25-7 SHT 7 OF 7 REV. SET 1